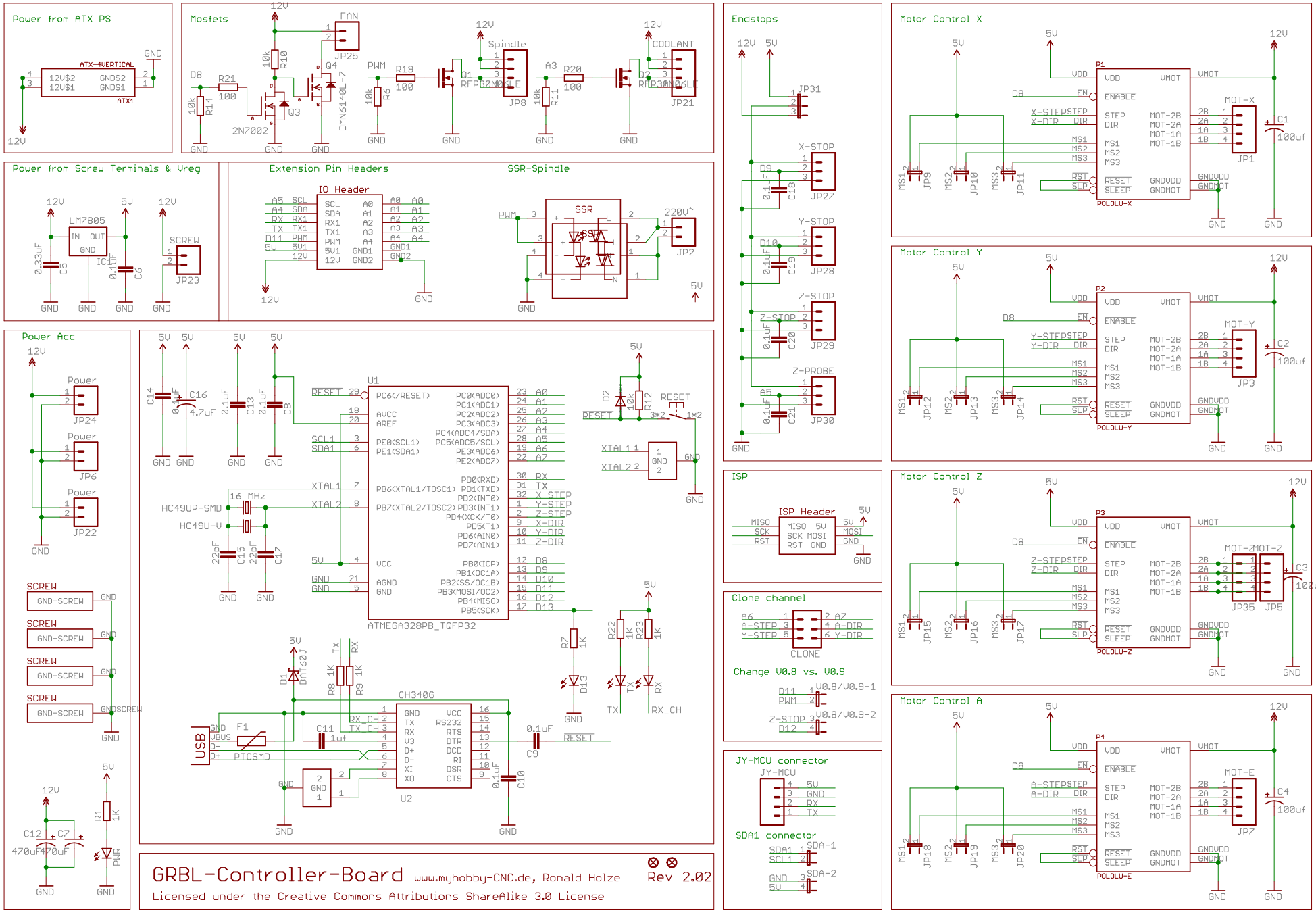
Power from ATX PS
ATX-4VERTICAL
ATX1
Mosfets
FAN
JP25
Spindle
JP8
COOLANT
JP21
2N7002
DMN6140L-7
RFP30N06LE
Power from Screw Terminals & Vreg
LM7805
SCREW
JP23
Extension Pin Headers
IO Header
SSR-Spindle
SSR
220V~
JP2
Power Acc
JP24
JP6
JP22
GND-SCREW
ATMEGA328PB_TQFP32
CH340G
USB
PTCSMD
BA160J
HC49UP-SMD
HC49U-V
16 MHz
Endstops
JP31
X-STOP
JP27
Y-STOP
JP28
Z-STOP
JP29
Z-PROBE
JP30
ISP
ISP Header
Clone channel
CLONE
Change V0.8 vs. V0.9
V0.8/V0.9-1
V0.8/V0.9-2
JY-MCU connector
JY-MCU
SDA1 connector
SDA-1
SDA-2
Motor Control X
P1
POLOLU-X
MOT-X
JP1
Motor Control Y
P2
POLOLU-Y
MOT-Y
JP3
Motor Control Z
P3
POLOLU-Z
MOT-Z
JP35
JP5
Motor Control A
P4
POLOLU-E
MOT-E
JP7
GRBL-Controller-Board
www.myhobby-CNC.de, Ronald Holze
Rev 2.02
Licensed under the Creative Commons Attributions ShareAlike 3.0 License