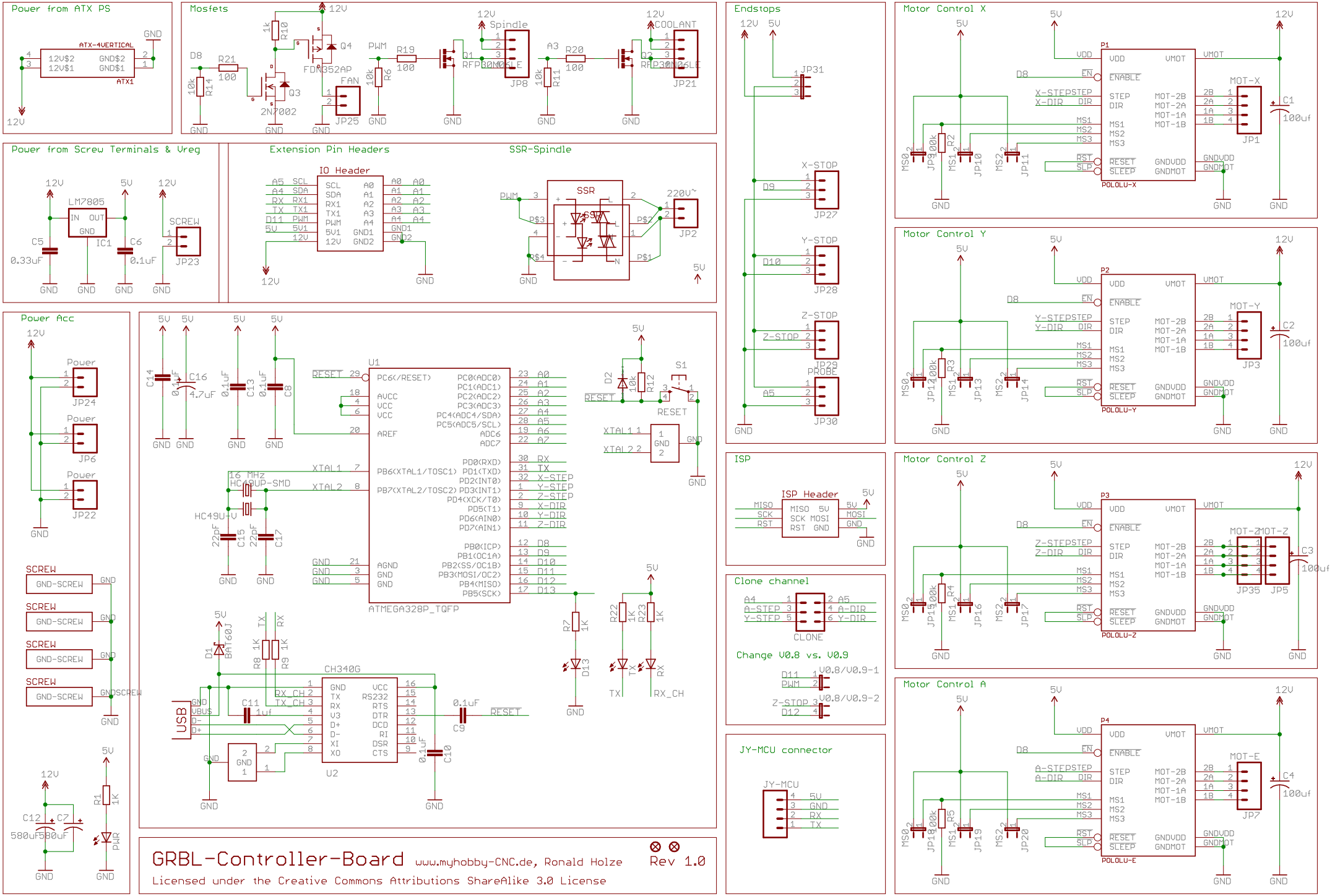
Power from ATX PS
Mosfets
Endstops
Motor Control X
Power from Screw Terminals & Vreg
Extension Pin Headers
SSR-Spindle
Motor Control Y
Power Acc
ISP
Motor Control Z
Clone channel
Change V0.8 vs. V0.9
Motor Control A
JY-MCU connector
GRBL-Controller-Board
www.myhobby-CNC.de, Ronald Holze
Rev 1.0
Licensed under the Creative Commons Attributions ShareAlike 3.0 License