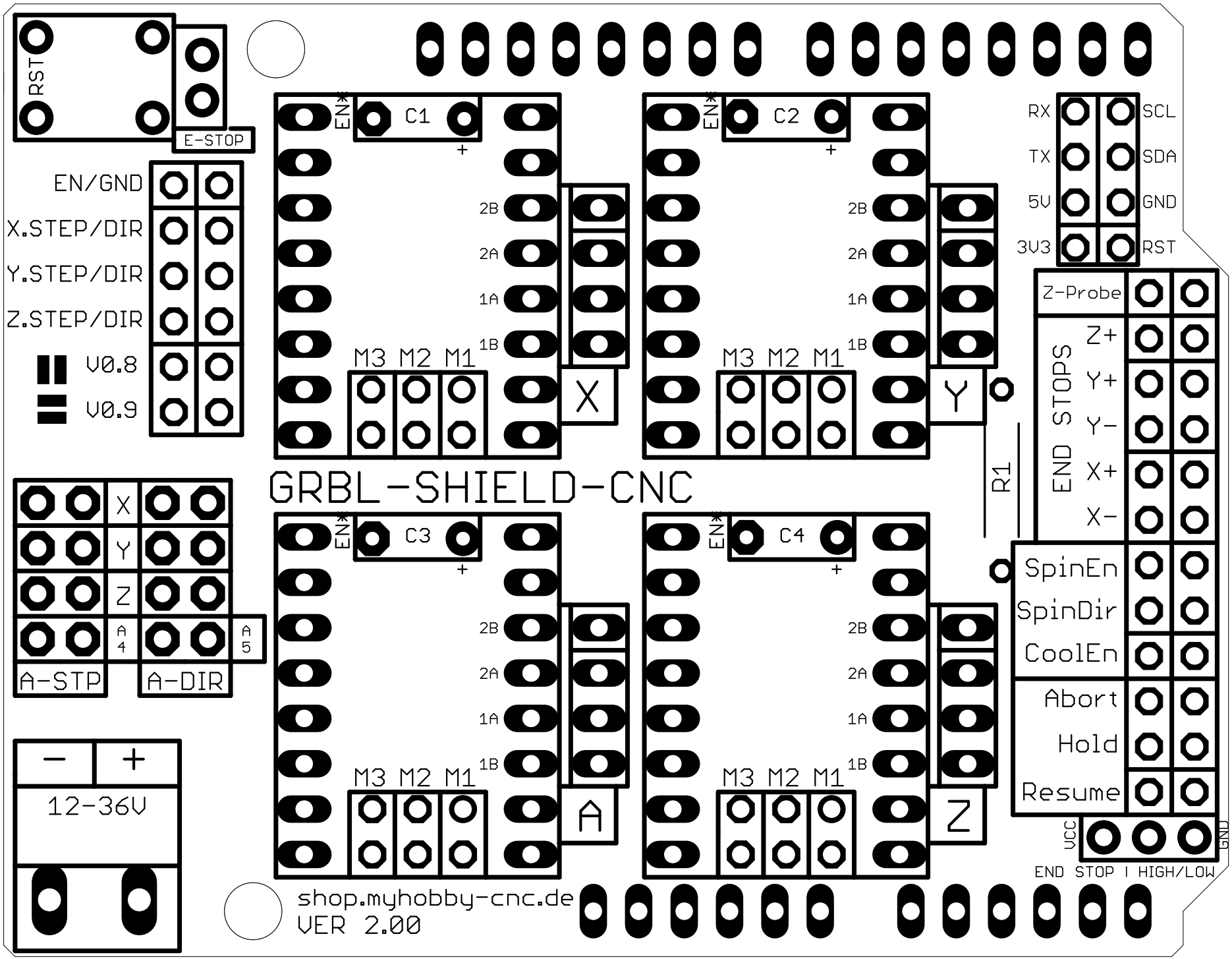
RST
E-STOP
EN/GND
X.STEP/DIR
Y.STEP/DIR
Z.STEP/DIR
V0.8
V0.9
EN*
C1
C2
C3
C4
2B
2A
1A
1B
M3 M2 M1
X
Y
A
Z
RX
TX
5V
3V3
SCL
SDA
GND
RST
Z-Probe
END STOPS
Z+
Y+
Y-
X+
X-
R1
SpinEn
SpinDir
CoolEn
Abort
Hold
Resume
VCC
GND
END STOP | HIGH/LOW
A4
A5
A-STP
A-DIR
12-36V
GRBL-SHIELD-CNC
shop.myhobby-cnc.de
VER 2.00